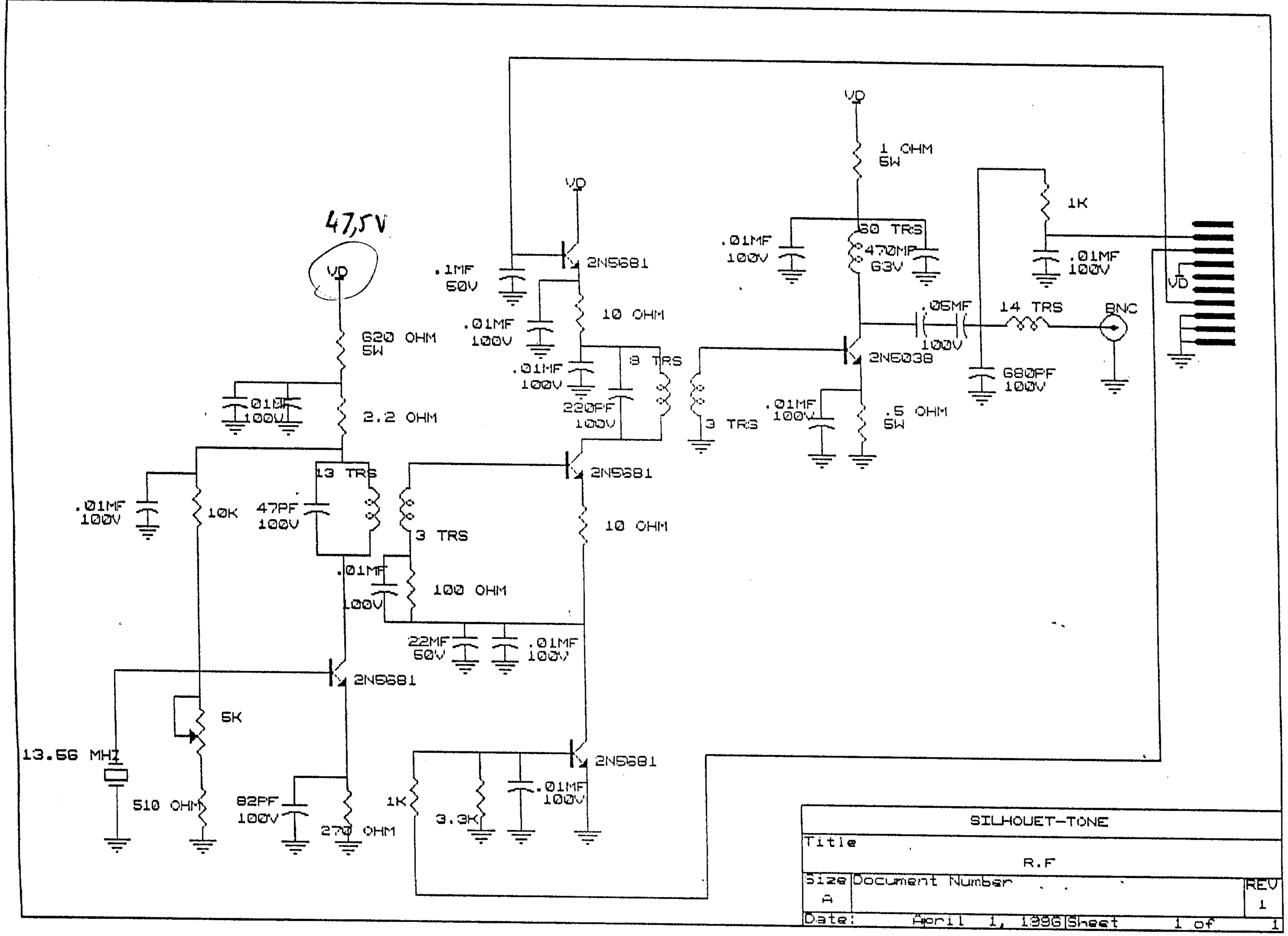

SILHOUET-TONE		
Title R.F		
Size A	Document Number	REV 1
Date: April 1, 1996	Sheet 1 of 1	